VILLEROY & BOCH
VICONNECT LOW LEVEL
INWALL CISTERN WITH FRAME

PATERSON
NEW ZEALAND 1955

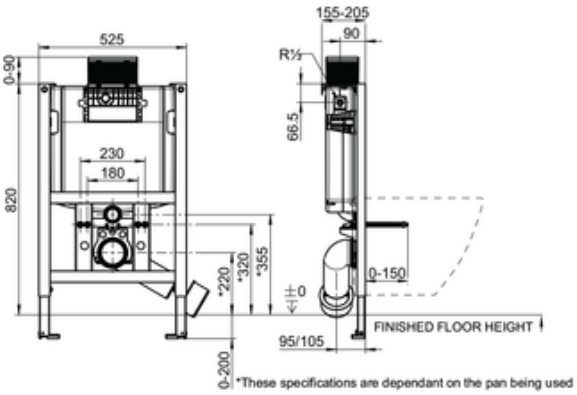

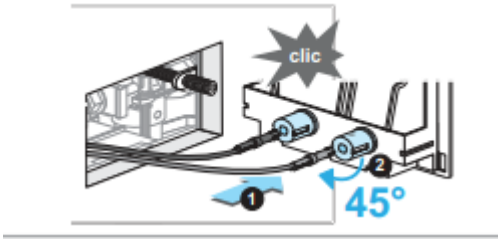

BRAND / MODEL	Villeroy & Boch ViConnect Low Level Inwall Cistern and Frame
ACTUATION TYPE	Mechanical
CODE	92233600
ADDITIONAL INFORMATION	With Qwick Clic Cable Technology
WARRANTY	15 Years*
WELS RATING	4 Star WELS Rating
WATER CONSUMPTION	4.5/3L (3.5 Avg) Flush