VILLEROY & BOCH
VICONNECT
INWALL CISTERN WITH FRAME

PATERSON
NEW ZEALAND 1955

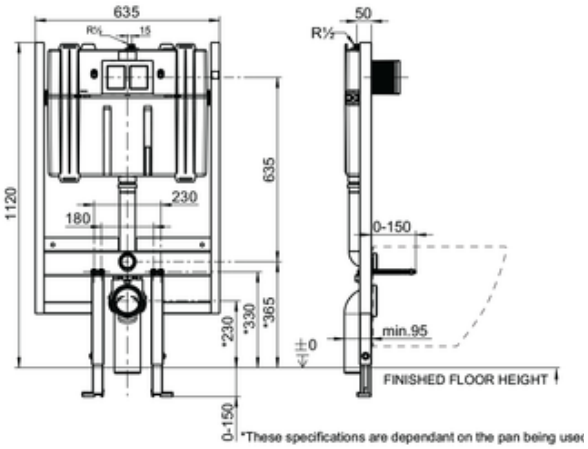

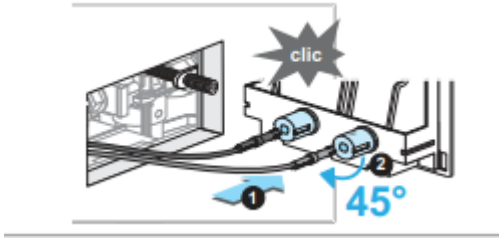

BRAND / MODEL	Villeroy & Boch ViConnect Inwall Cistern and Frame
ACTUATION TYPE	Mechanical
CODE	92233500
ADDITIONAL INFORMATION	With Qwick Clic Cable Technology. Minimum installation depth is 90mm.
WARRANTY	15 Years*
WELS RATING	4 Star WELS Rating
WATER CONSUMPTION	4.5/3L (3.5 Avg) Flush