5115010
SENTO Series

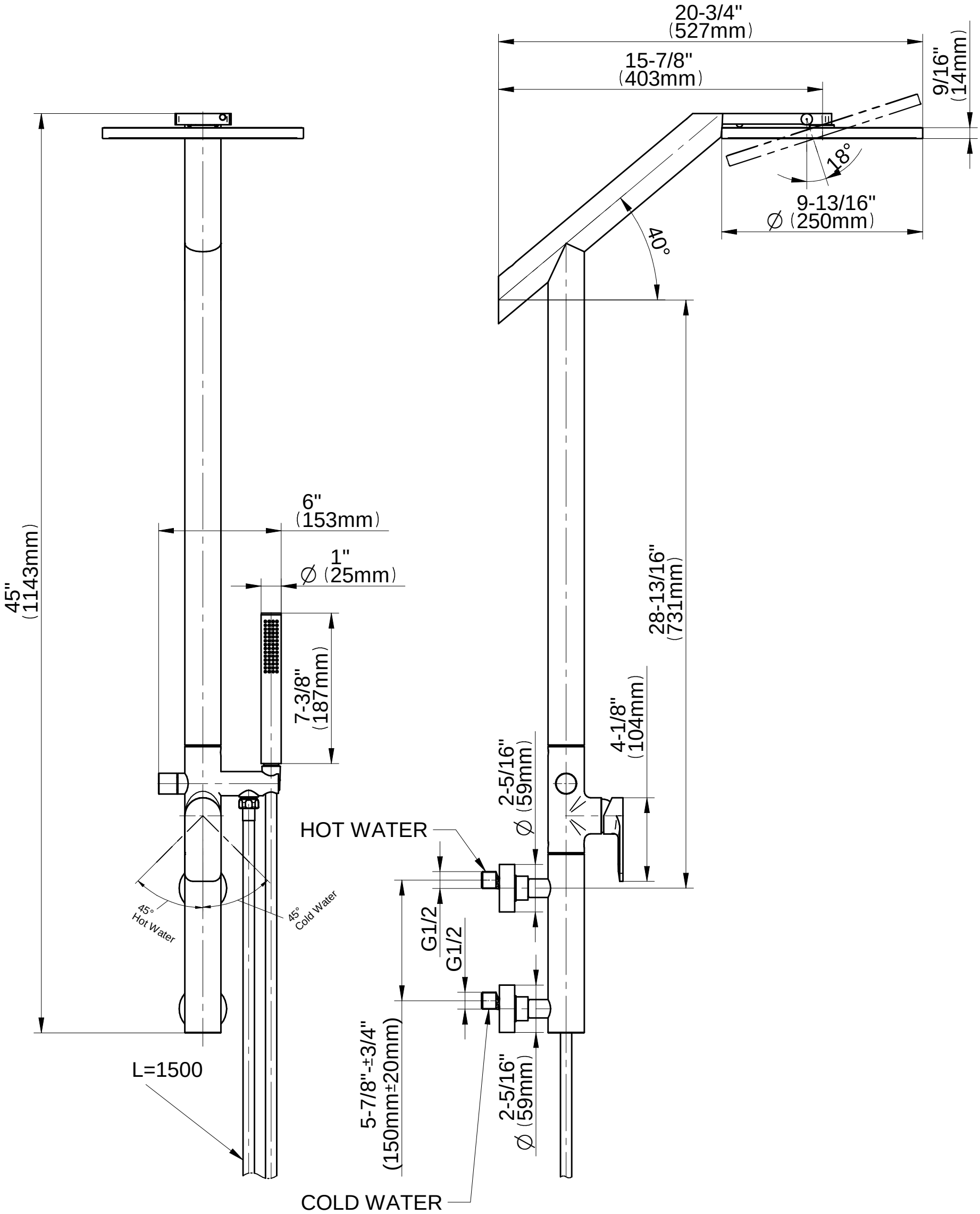

GRAFF®
CUTTING EDGE DESIGN