TECHNICAL SPECIFICATION SHEET

Vita Vessel Basin Mixer

Product Image

Product Details

Code:	**1106561**
Brand:	Villeroy & Boch
Range:	Vita
Warranty:	15 Years*
WELS:	*5 Star 5.5 LPM, Reg #: T43572*

Additional Features

Required Product

Recommended Products

Additional Notes
- Lead Free
- 25mm Ceramic Cartridge

Technical Specification

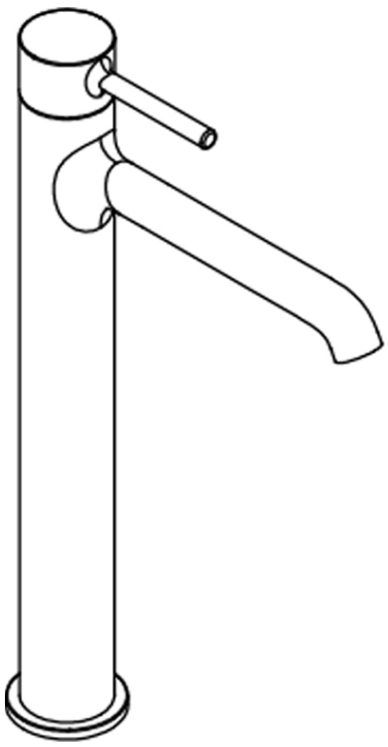

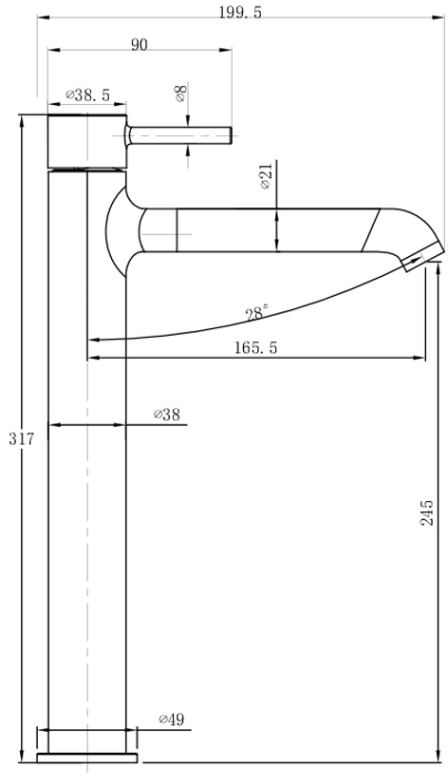

Note: All dimensions are in millimetres and are subject to normal manufacturing variations. Always use the physical product measurements for cut-outs and rough-ins as the technical details shown may differ from the actual product. Use acetic cured silicone sealant. Do not use epoxy type adhesives. Clean with damp cloth. Do not use abrasive cleaners, liquids or pastes.

PATERSON
NEW ZEALAND 1955